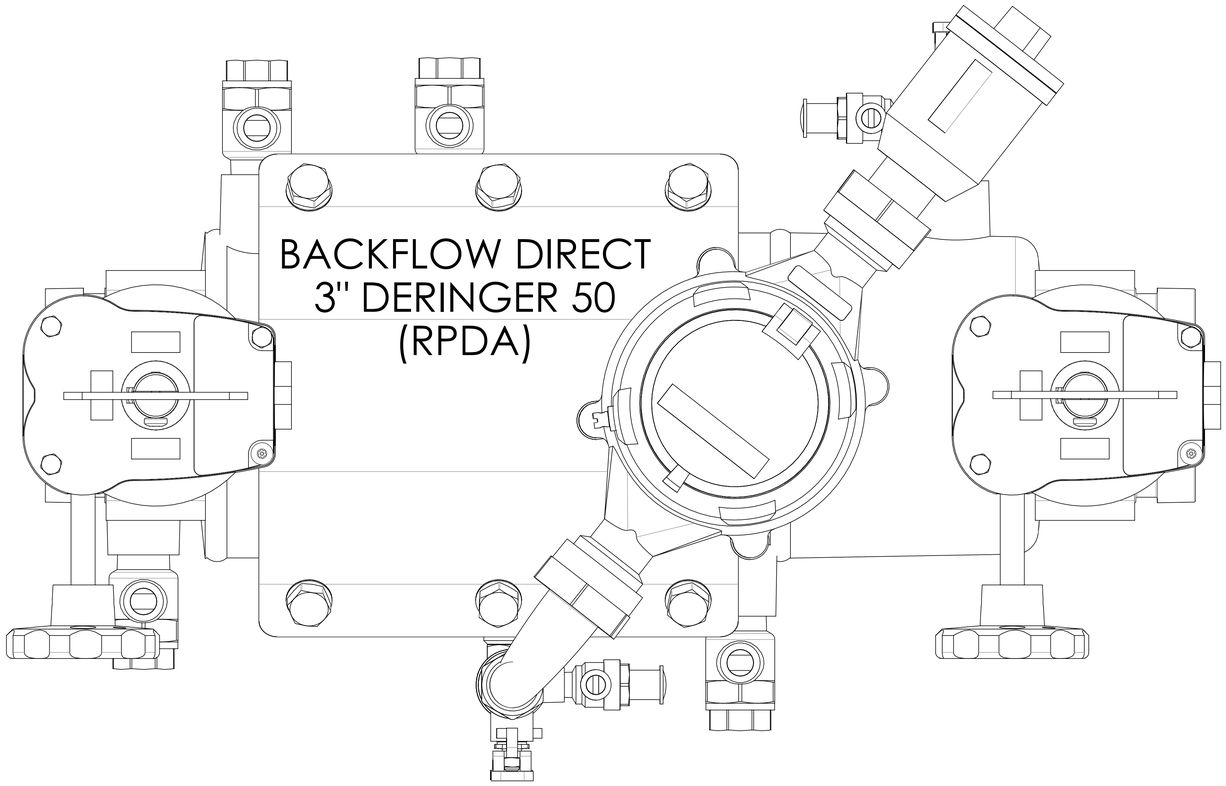
BACKFLOW DIRECT
3" DERINGER 50
(RPDA)

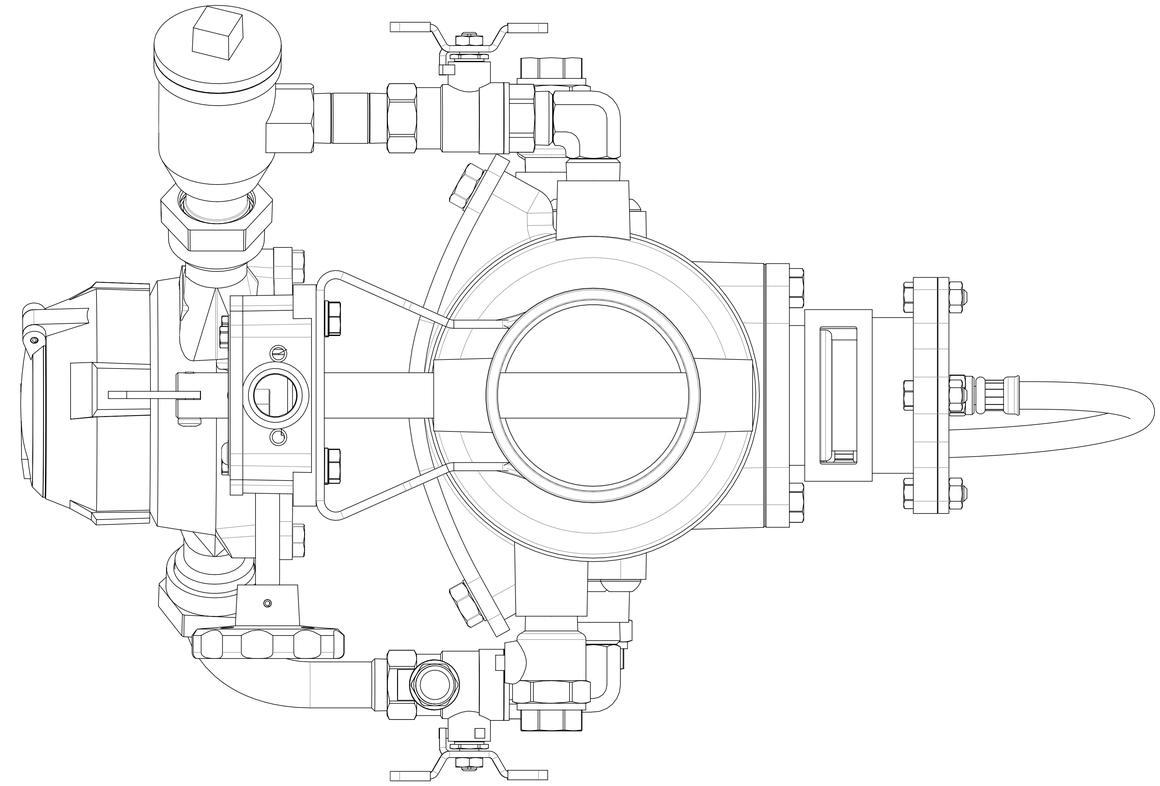

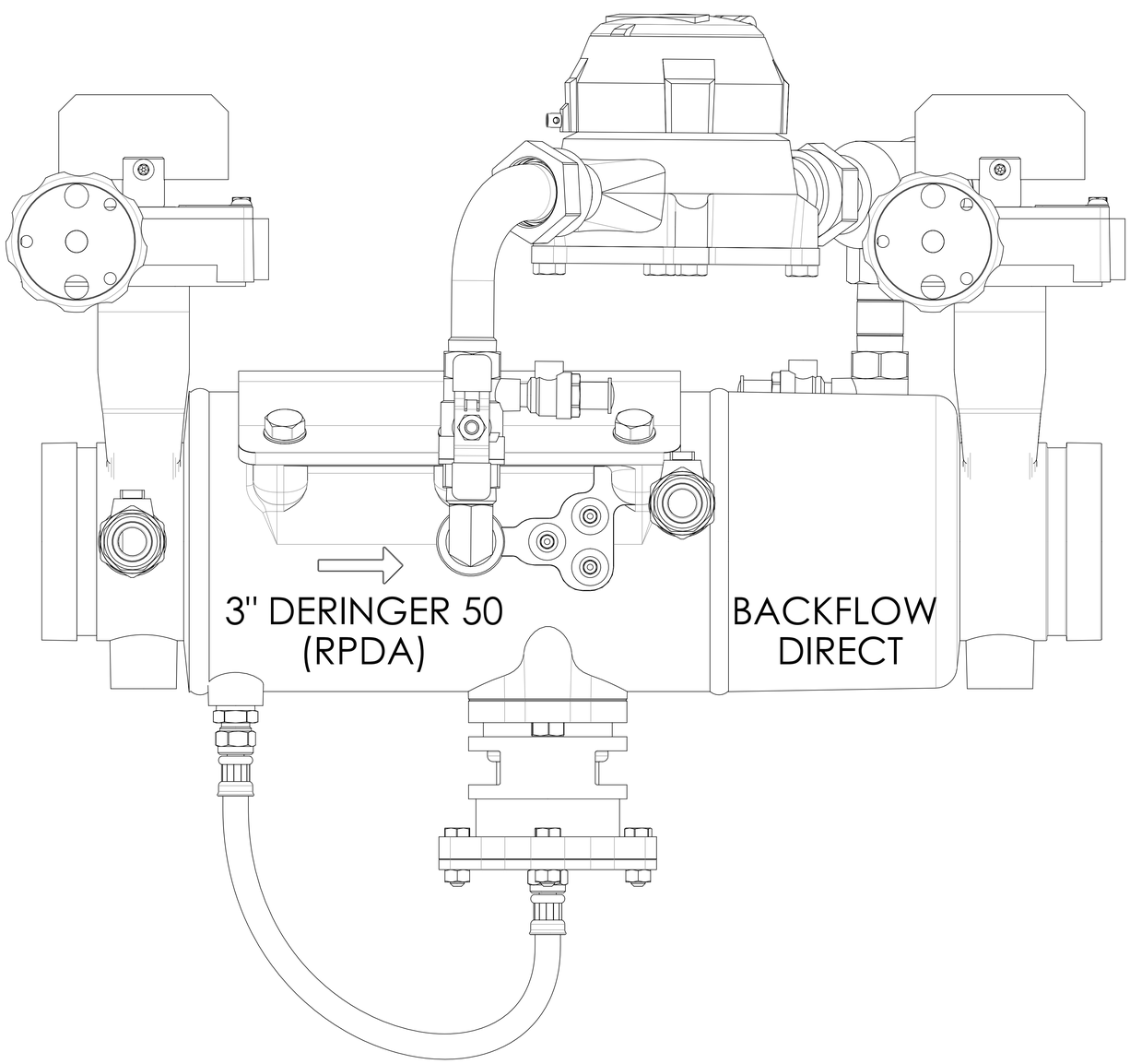
3" DERINGER 50
(RPDA)
BACKFLOW
DIRECT

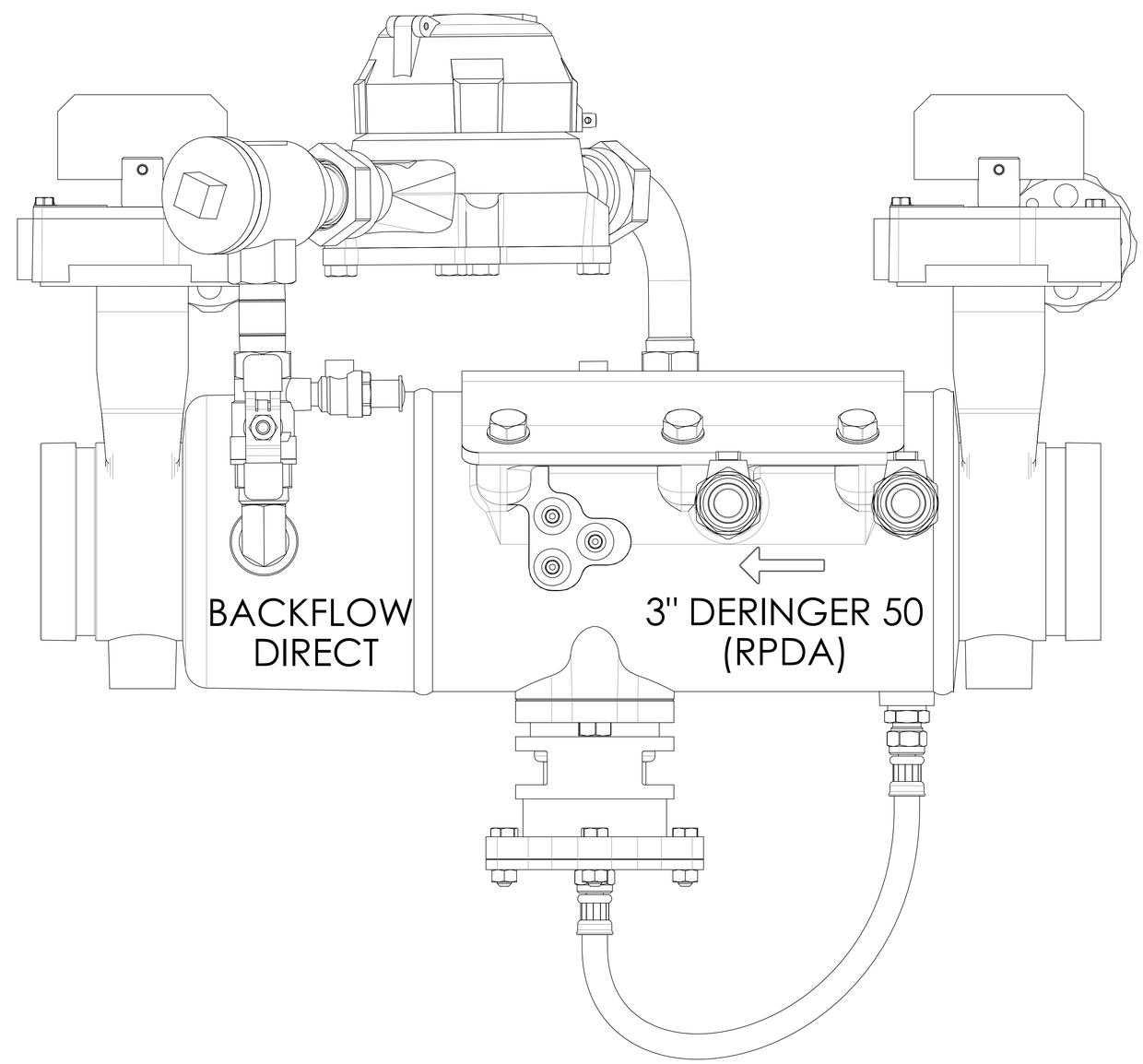
BACKFLOW
DIRECT
3" DERINGER 50
(RPDA)