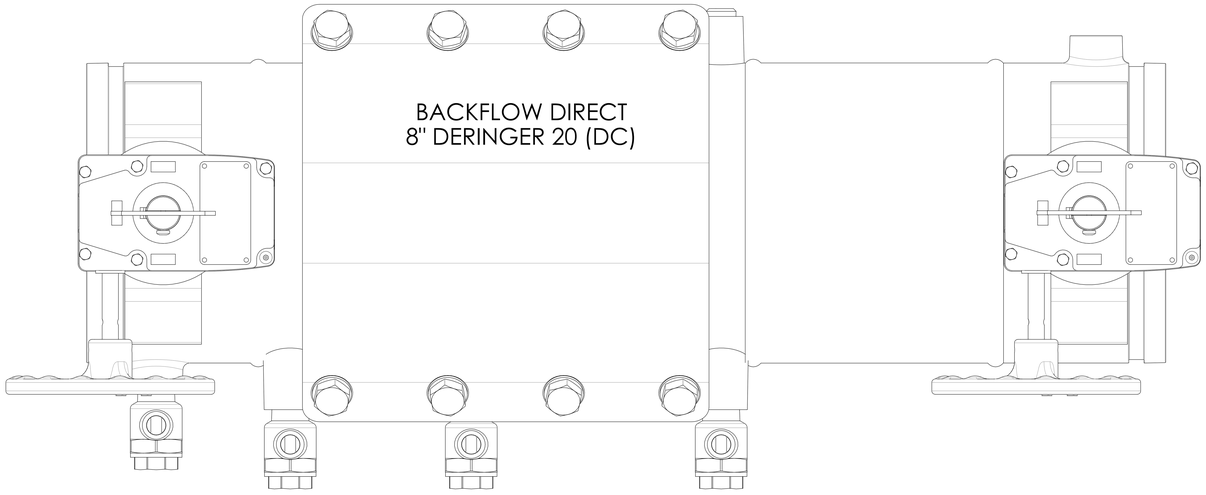
BACKFLOW DIRECT
8" DERINGER 20 (DC)

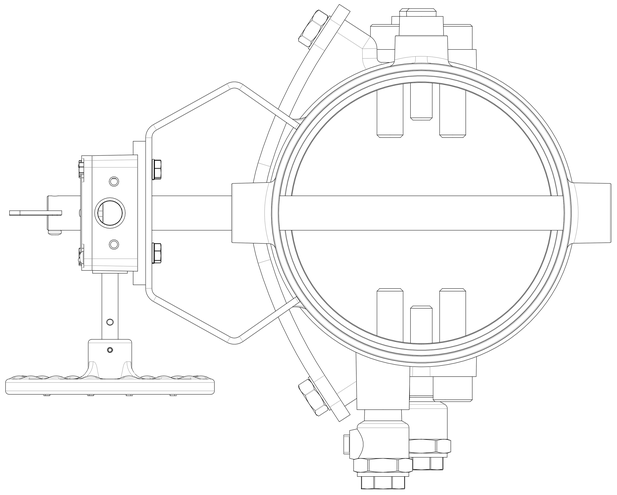

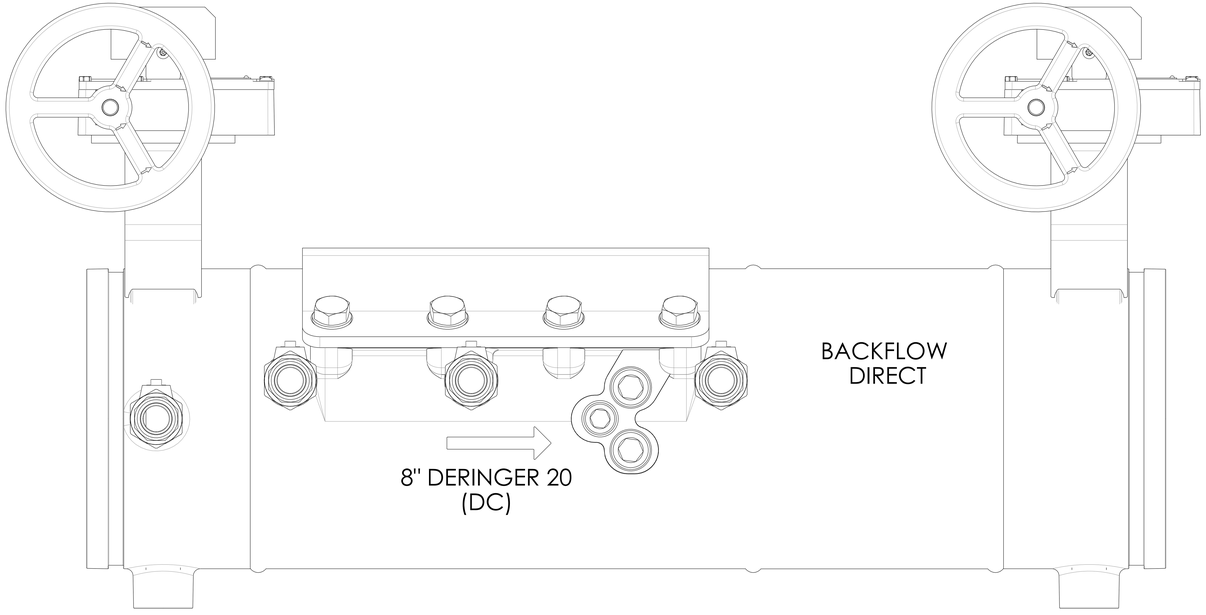
BACKFLOW
DIRECT
8" DERINGER 20
(DC)

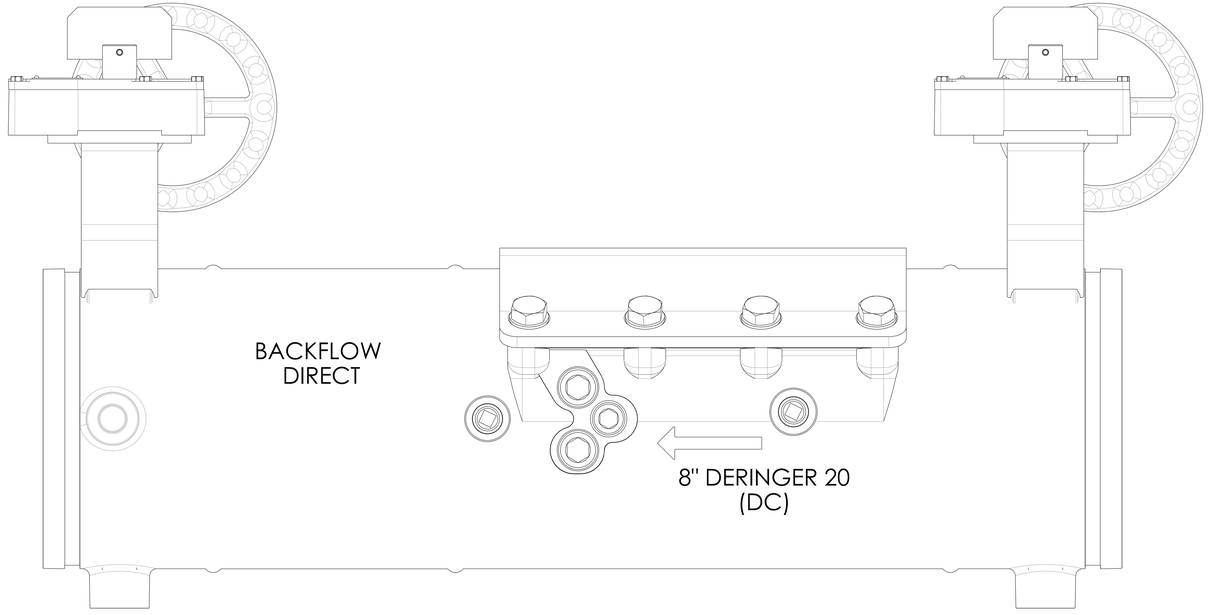
BACKFLOW
DIRECT
8" DERINGER 20
(DC)