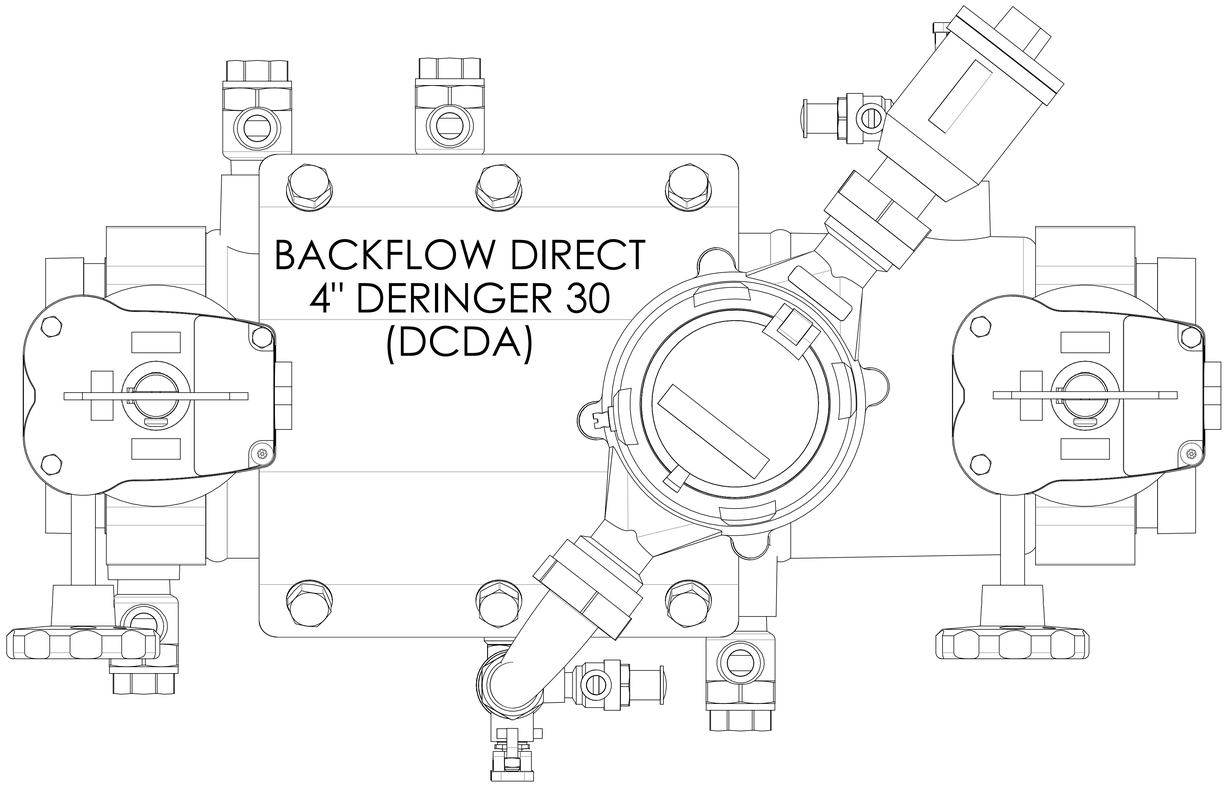
BACKFLOW DIRECT
4" DERINGER 30
(DCDA)

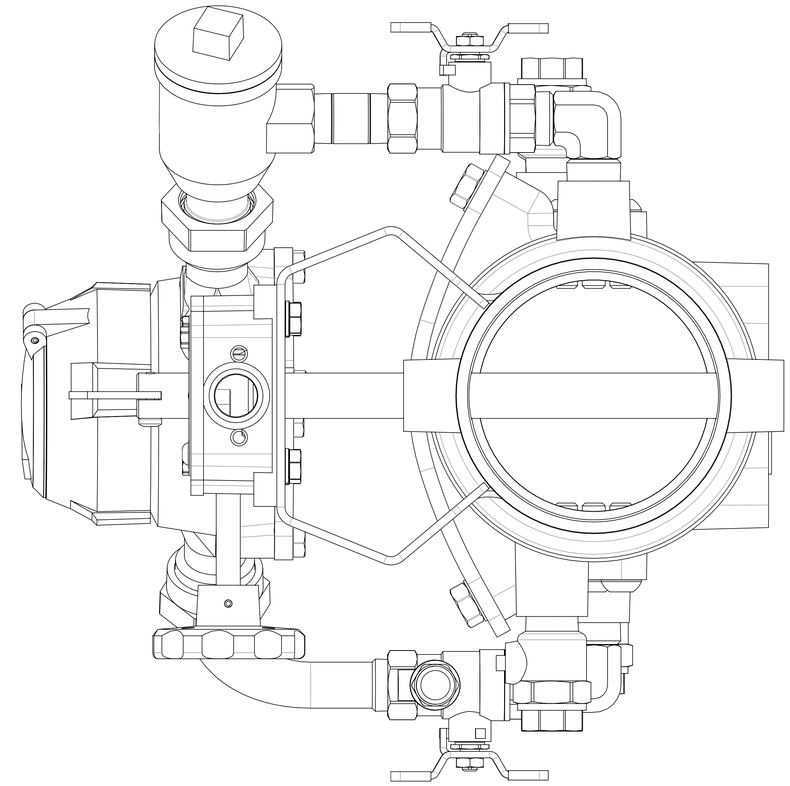

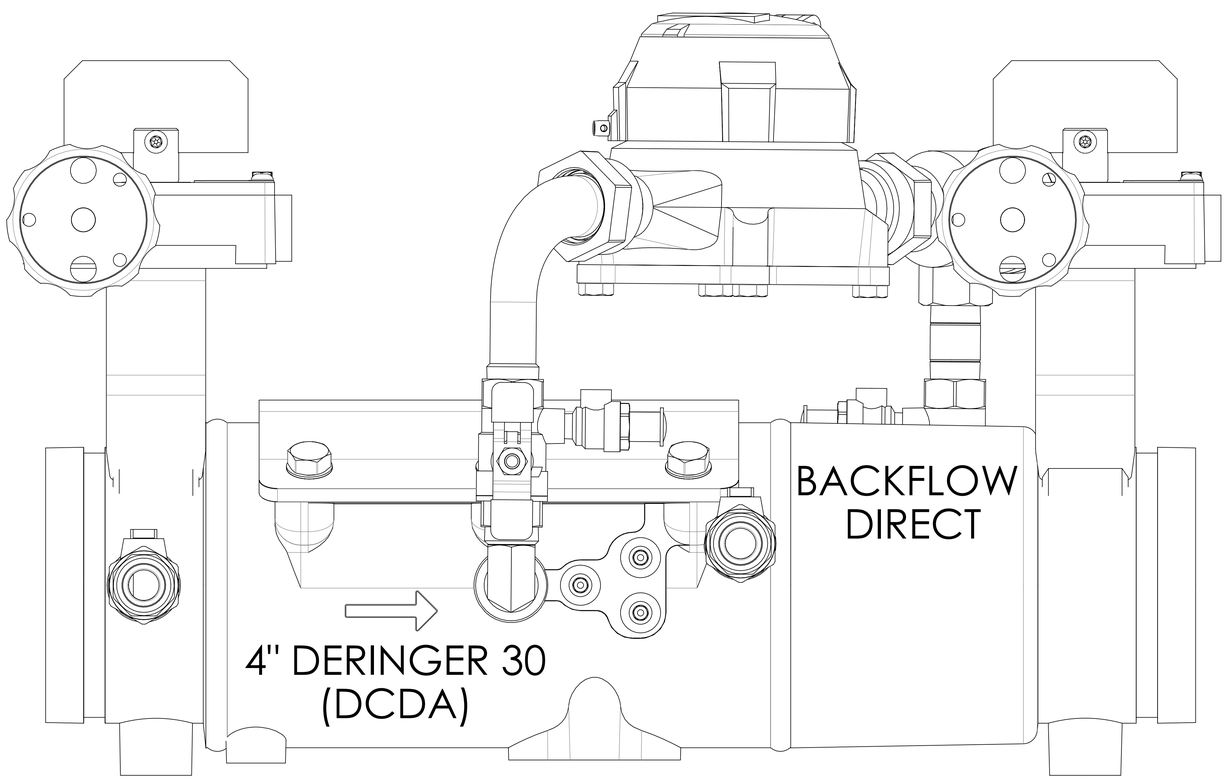
BACKFLOW
DIRECT
4" DERINGER 30
(DCDA)

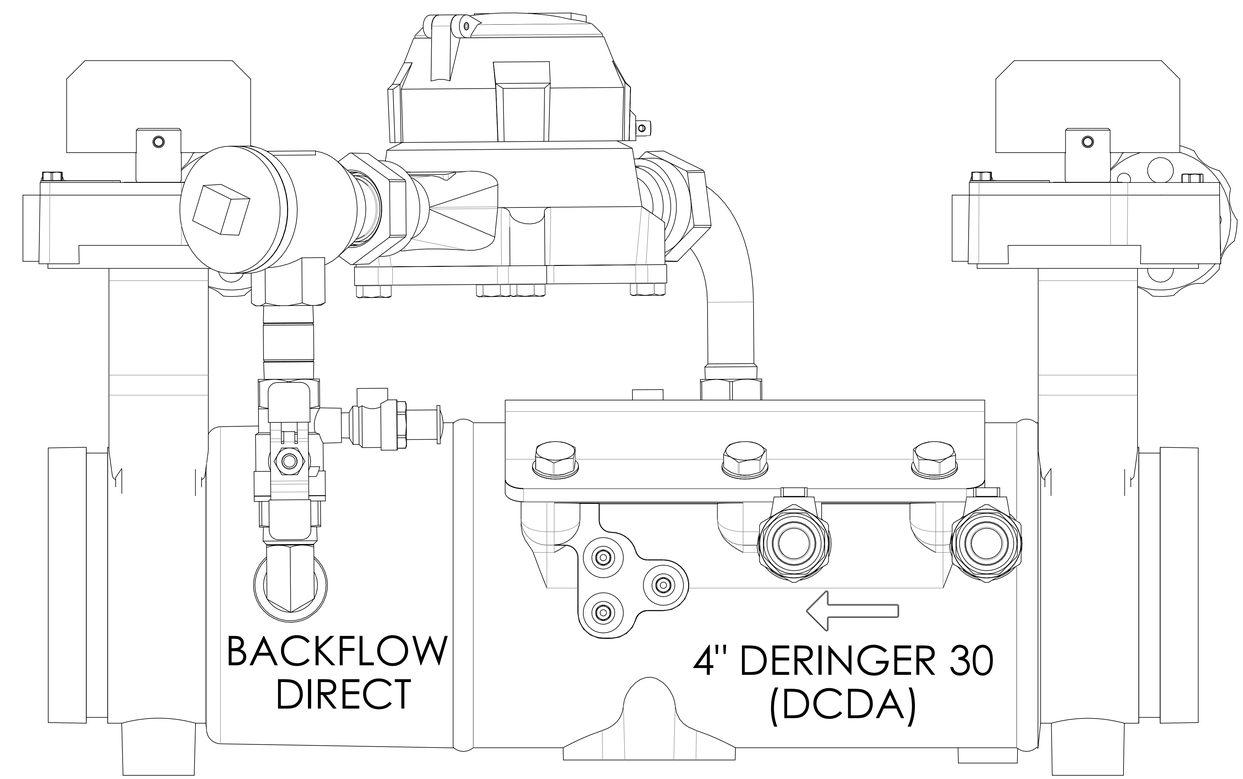
BACKFLOW
DIRECT
4" DERINGER 30
(DCDA)