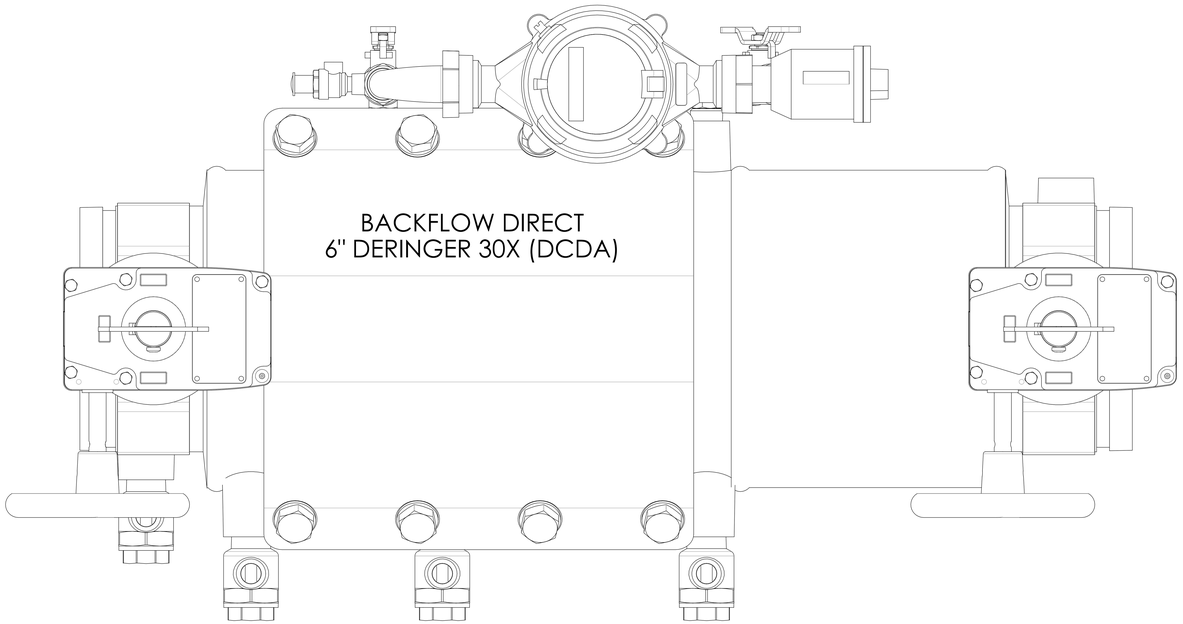
BACKFLOW DIRECT
6" DERINGER 30X (DCDA)

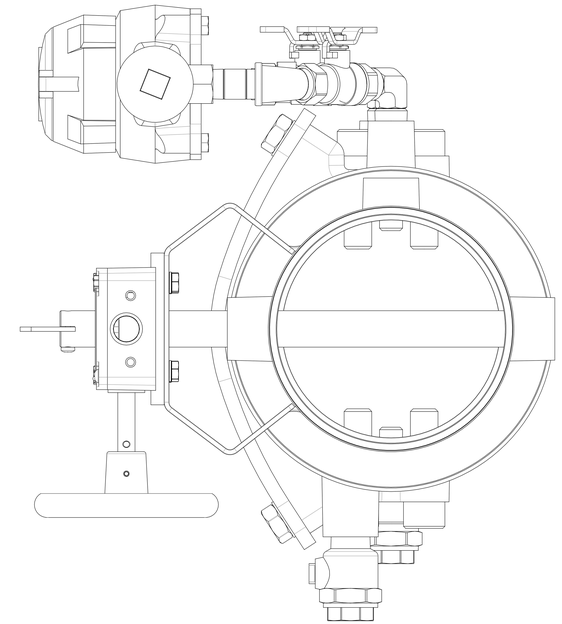

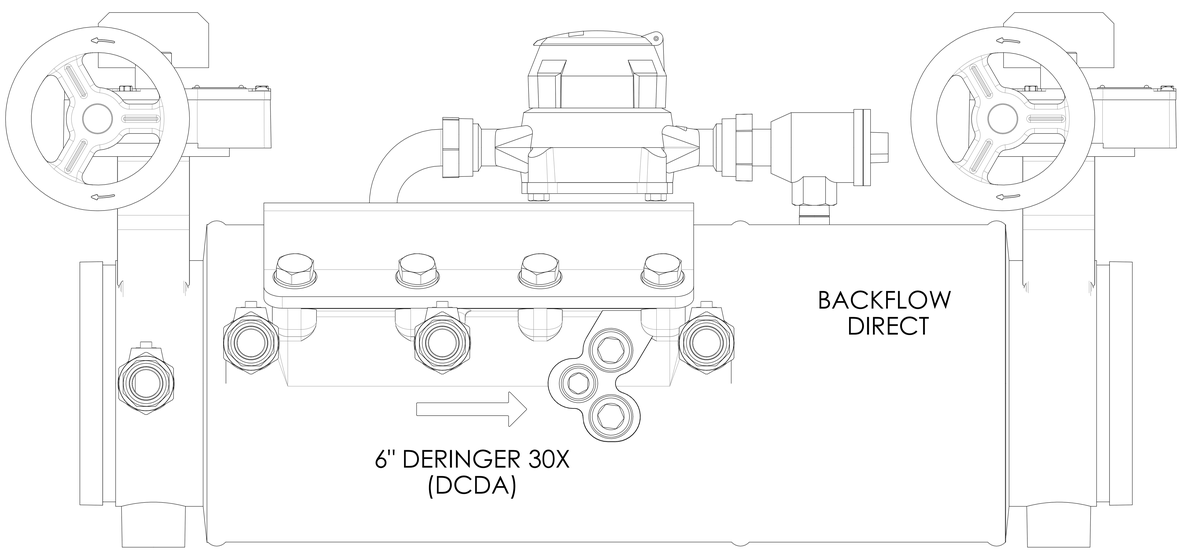
BACKFLOW
DIRECT
6" DERINGER 30X
(DCDA)

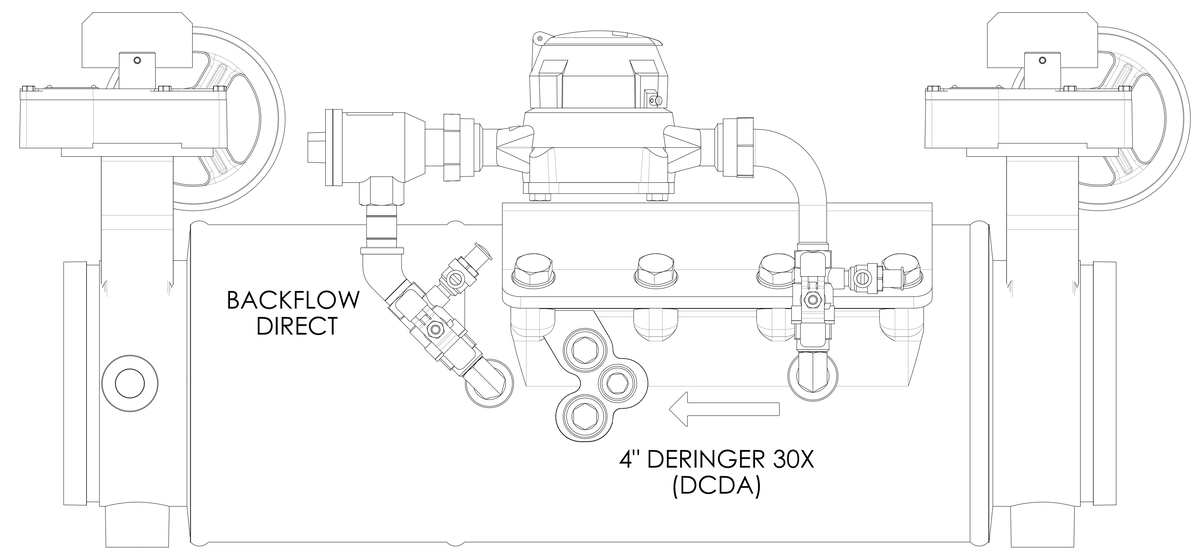
BACKFLOW
DIRECT
4" DERINGER 30X
(DCDA)