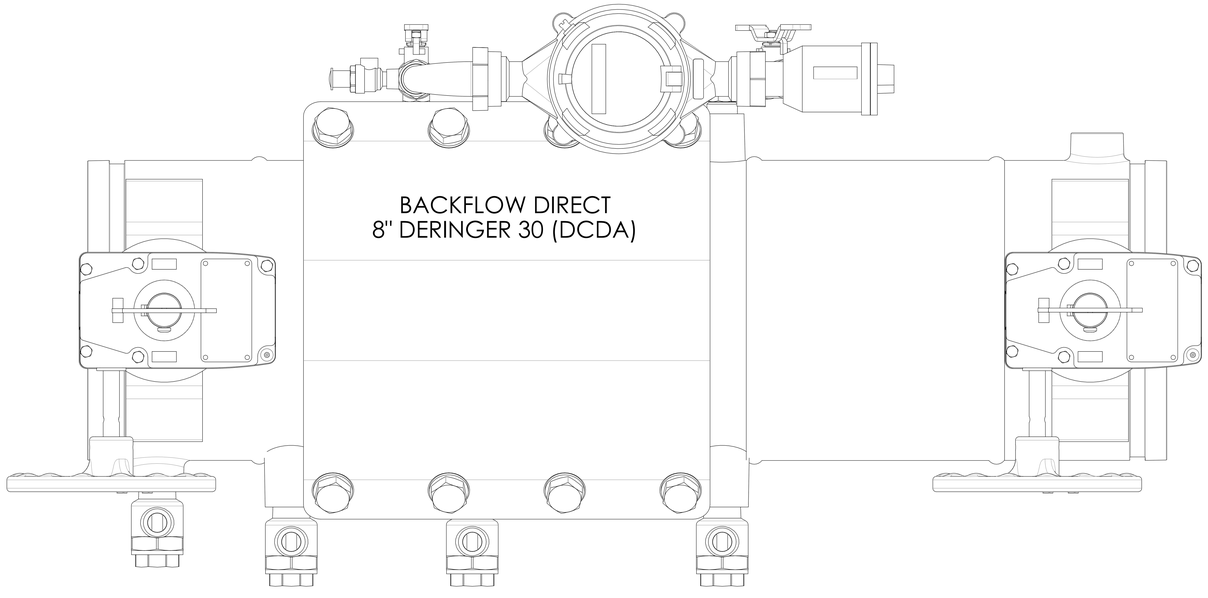
BACKFLOW DIRECT
8" DERINGER 30 (DCDA)

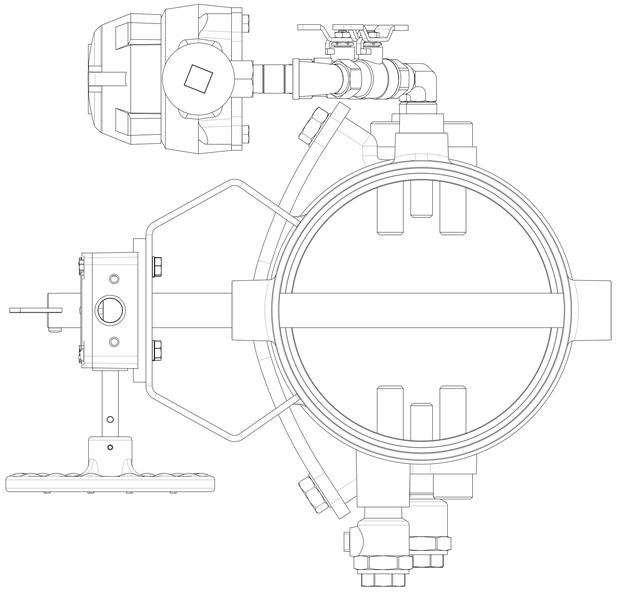

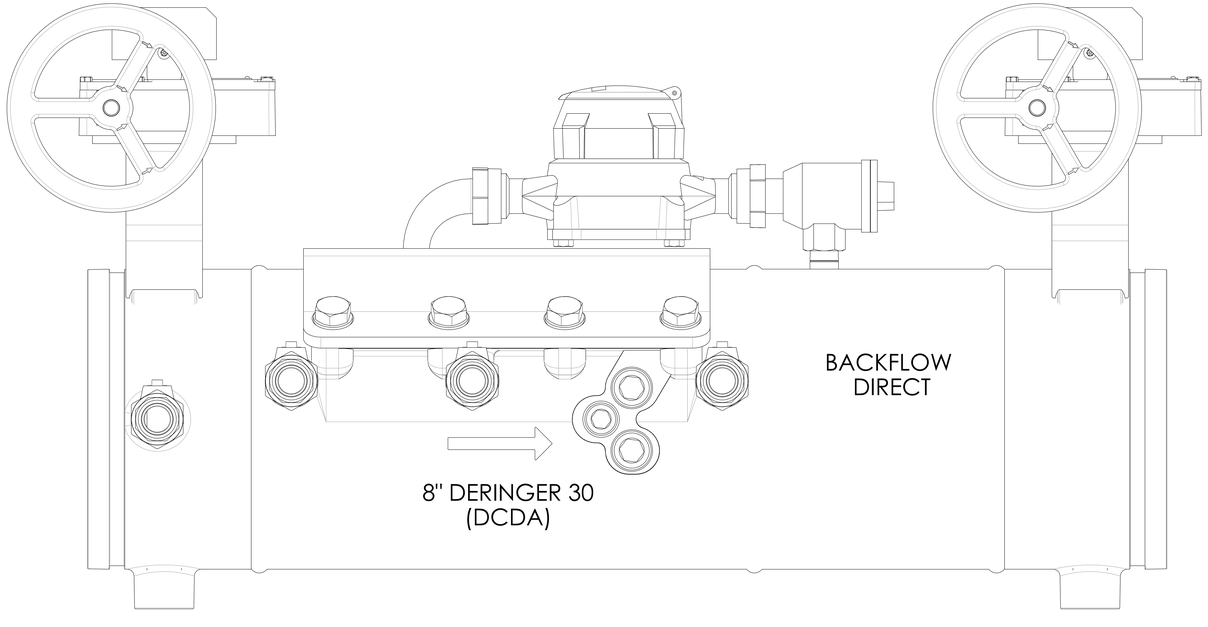
BACKFLOW
DIRECT
8" DERINGER 30
(DCDA)

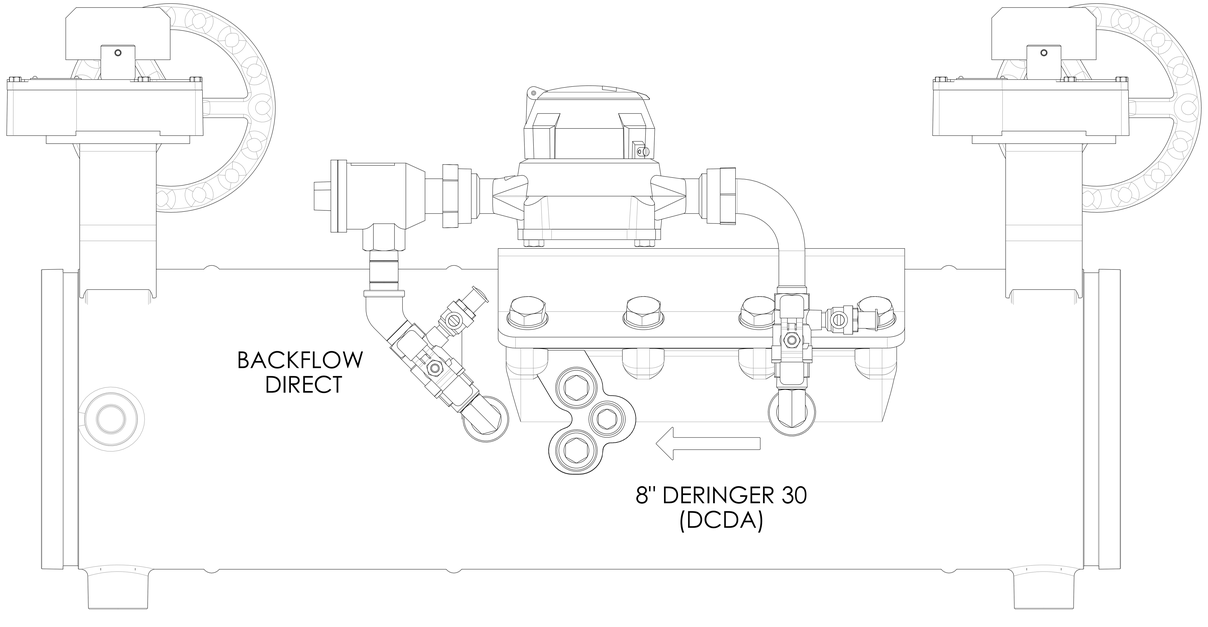
BACKFLOW
DIRECT
8" DERINGER 30
(DCDA)